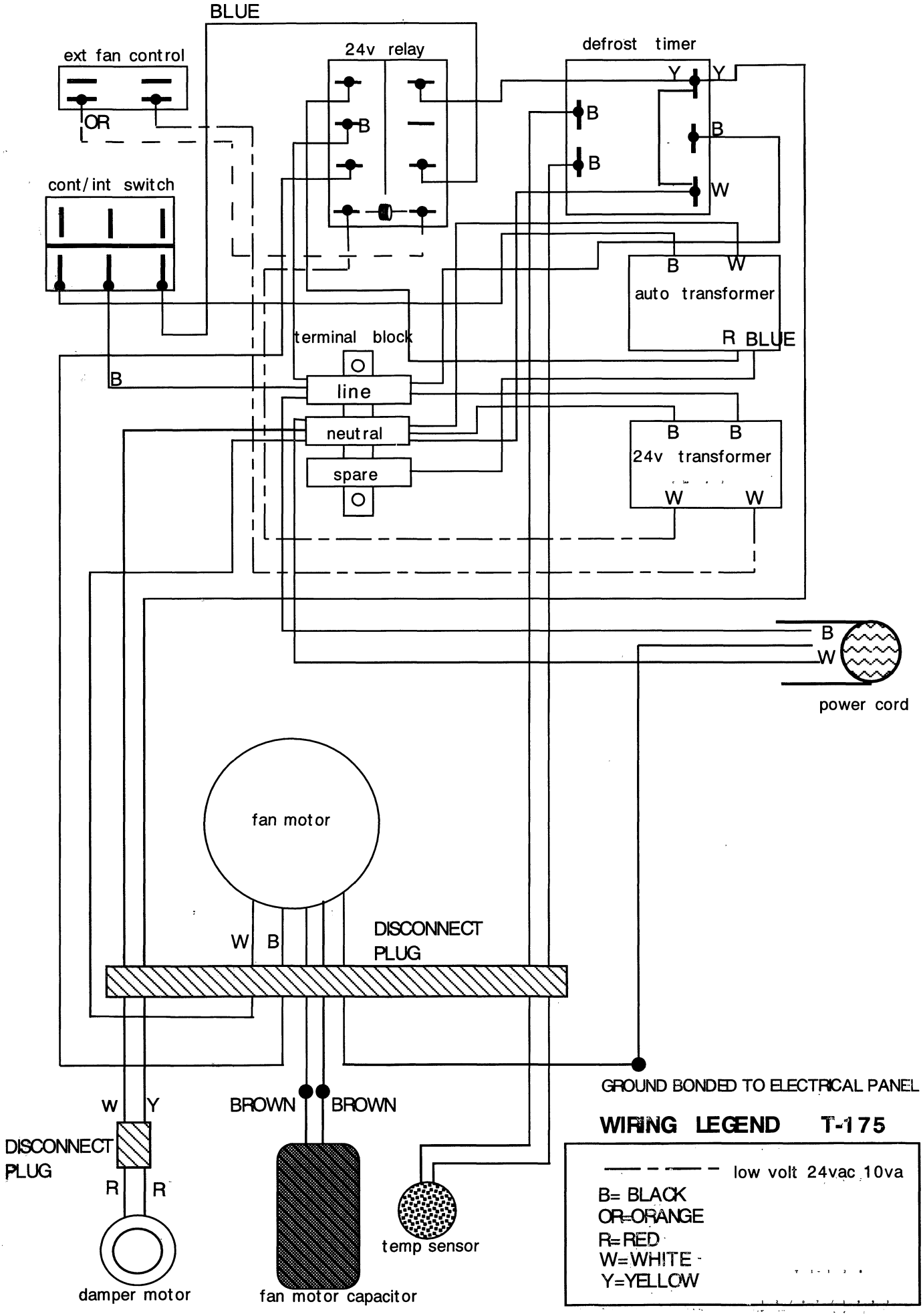
BLUE
ext fan control
OR
24v relay
B
defrost timer
Y
Y
B
B
B
W
cont/int switch
B
W
auto transformer
R BLUE
terminal block
B
line
neutral
spare
B
B
24v transformer
W
W
B
W
power cord
fan motor
W
B
DISCONNECT
PLUG
GROUND BONDED TO ELECTRICAL PANEL
W
Y
BROWN
BROWN
DISCONNECT
PLUG
R
R
damper motor
fan motor capacitor
temp sensor
WIRING LEGEND T-175
low volt 24vac 10va
B= BLACK
OR=ORANGE
R=RED
W=WHITE
Y=YELLOW